CC CENTER CHANNEL LIGHT
Basic Dimensions

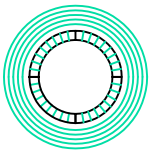

LENS PATTERN

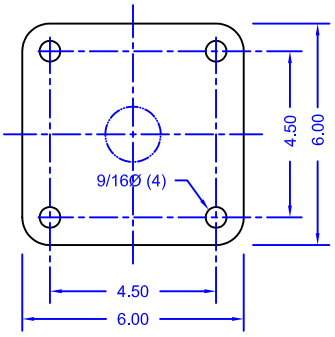

MTG DIM

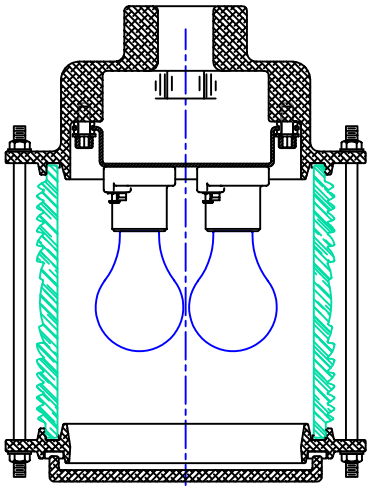

FIXTURE SECTION

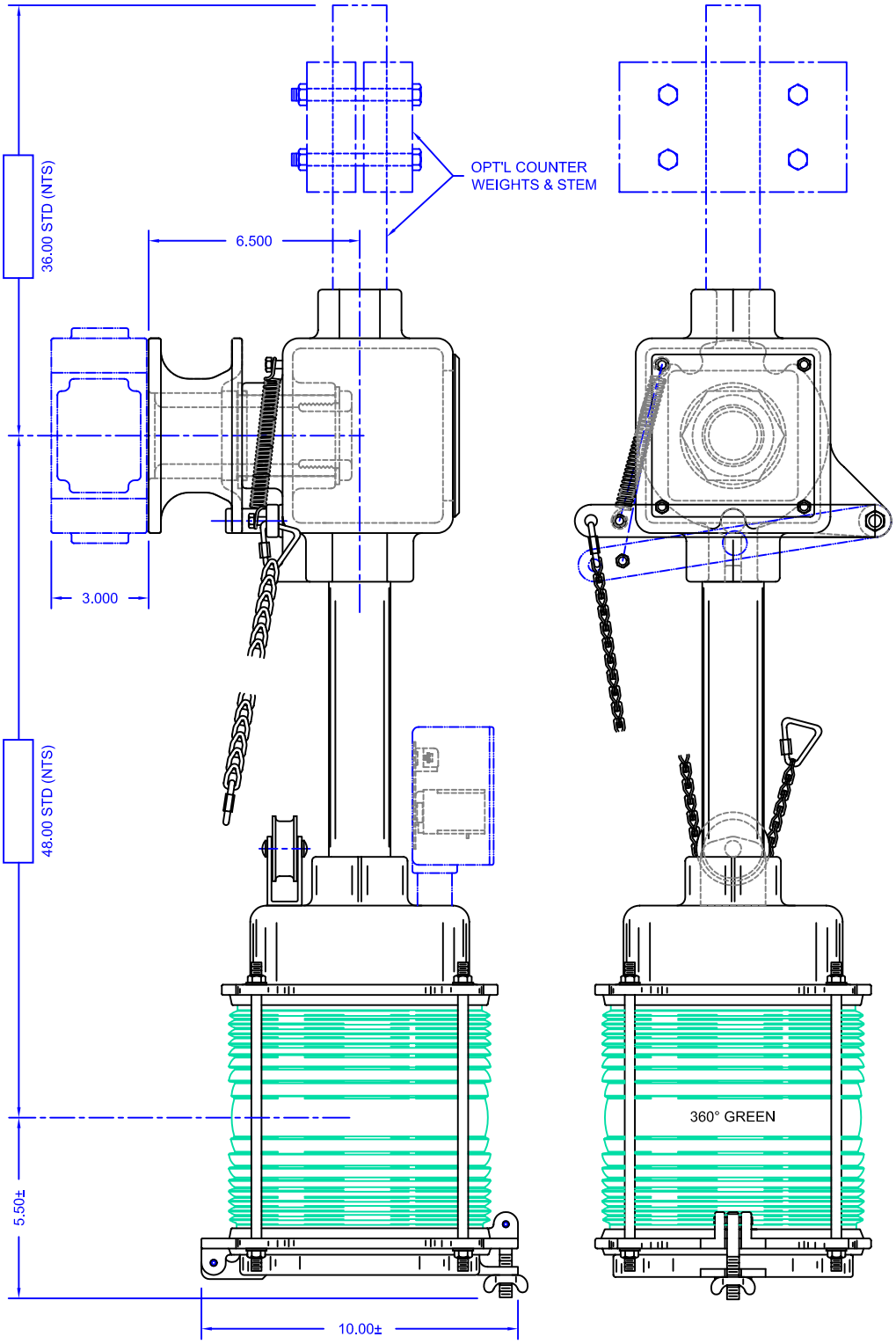

OVERALL DIMENSIONS